- Date, itemized cost and description of the service given.
- Name and driver license number of the applicant.
- Name (or business name), mailing address, and the Federal ID or Social Security number of the interpreter.

Foreign Language Interpreters

An applicant may bring a foreign language interpreter to translate instructions on an auto or motorcycle skills test. The department does not provide compensation to foreign language interpreters. All interpreters must be at least 16 years old. An interpreter can't be used for a CDL skills test, including preparatory conversation before the test and feedback after the test.

The interpreter must present their driver license or other photo identification to the examiner at the test site. The examiner must record the interpreter's name and identification information. If the interpreter is unwilling to provide this information, the driving skills test won't be administered.

During the test, the interpreter may only communicate with the driver to translate each set of instructions as the examiner presents them. Additional comments by the interpreter aren't permitted except in an emergency. The examiner may terminate the driving skills test after giving one warning of unnecessary interaction with the driver.

Facilitators

A facilitator is a person who assists a driver license applicant in obtaining a driver license and may provide language interpretation, offer driver training, schedule appointments or transport applicants to the test site.

Some persons, driver education providers, and other businesses that aren't testers advertise testing, but they are actually facilitators who charge a fee to take applicants to an approved tester. You can save money by dealing directly with an approved tester.

You also should beware of facilitators who offer to prepare you for your driving skills test without first giving you a written agreement that identifies them as a certified driver education provider. It is illegal for anyone to charge a fee for instruction unless they are certified by the Department of State.

Requirements for Taking the Driving Skills Test

Applicants under age 18 must meet the following requirements **before** taking the driving skills test:

- Complete Segment 1 of an approved driver education course.
- Obtain a Michigan Level 1 license from a Secretary of State office and hold the Level 1 license for a minimum of 6 months prior to testing. Your driving skills test examiner must verify that you have held your Level 1 license for the required time.
- Complete Segment 2 of an approved public or private driver education program. You must present your Segment 2 completion certificate to your driving skills test examiner.
- Log a minimum of 50 hours of practice driving, 10 hours of which must have occurred at night, with a parent, legal guardian, or a licensed adult 21 years of age or older with parent permission. The driving log must be shown to the examiner. See the student Driving Log.
- Be accompanied by a parent or legal guardian (or an adult appointed, in writing, by a parent or guardian).
- Be at least 15 years of age.
- Have no convictions, civil infractions, license suspensions or at-fault crashes during the 90-day period immediately preceding your driving skills test and application for your Level 2 license.

Applicants 18 years of age or older, not previously licensed in this state or in any other state or country, must meet the following requirements before taking a driving skills test:

- Pass required vision and knowledge (written) tests at a Michigan Secretary of State office.
- Pay required fees and obtain a Michigan Operator or Chauffeur Temporary Instruction Permit (TIP).
- Practice driving on a TIP for a minimum of 30 days to become eligible to take the driving skills test.

If you have been previously licensed in any state, and your license has been expired for more than four years, you will need to obtain a Temporary Instruction Permit (TIP) and pass the required driving skills test. Your 30-day minimum practice period may be waived by Secretary of State branch office staff.

Scheduling a Driving Skills Test

To take a driving skills test in Michigan, you must contact an approved driver testing business.

Driver testing businesses may be listed in your local area telephone book. The Department of State provides a listing of organizations, available from the following sources:

- Internet: Michigan.gov/SOS
- Department of State Information Center: 1-888-SOS-MICH (1-888-767-6424)
- Secretary of State offices

Fees charged by driver testing businesses **aren't regulated** by the Michigan Department of State. **Before** scheduling an appointment, applicants should inquire about all third-party testing fees, including initial and retest fees, refund policies, charges for improper documents, defective equipment, and failure to keep a test appointment. Driver testing businesses must be given the customer's name, driver license number, and phone number to schedule the driving skills test.

What to Take to the Driver Testing Business

- If you are under 18 years of age, a valid Michigan Level 1 license that you have held for a minimum of 6 months, along with your Segment 2 Driver Education completion certificate.
- If you are 18 years of age or older, a valid Michigan temporary instruction permit that you held for at least 30 days. The 30-day practice period may be waived by Secretary of State branch office staff if you were previously licensed in Michigan, another state, or another country.
- If you are under age 18, you must present a driving log documenting at least 50 hours of supervised driving, including a minimum of 10 hours at night. Also, your parent or legal guardian must sign a certification statement on the score sheet attesting to the practice driving hours. If your parent or legal guardian can't attend your driving skills test, use or copy the certification statement from this booklet, have it signed and present it to the examiner.
- If you are from another country, you must present your home country driver license and Driving Skills Test Authorization Receipt (DSTAR) from the Secretary of State.

- You must provide a vehicle that is in safe working order. The test vehicle should be one you are familiar with and have used during your practice driving.
- You must show proof of valid insurance, current vehicle registration or valid license plate for the test vehicle.
- Only the applicant, examiner, and any required passenger and/or interpreter may be in the vehicle. If the applicant is a minor, the minor's parent, legal guardian or authorized designated representative must be present throughout the test. Any designated representative must be authorized in writing by the parent or legal guardian. **No other passengers are allowed to be present during the test.**

Skills Tests Terminated Due to Defective Equipment

The following safety equipment guidelines will be used when administering the automobile driving skills test. Together, examiners and applicants will inspect and familiarize themselves with specific vehicle components. Certain defective vehicle equipment is reason for refusal of the driving skills test if it jeopardizes the safety of the vehicle's occupants.

Safety inspection includes the following equipment:

Brakes
Brake lights
Center-mounted rear brake light on 1986 or newer models
Doors (*)
Fuel level
Headlights
Heater/Defroster
Horn
Lug nuts (only one can be missing per vehicle)
Muffler
Rearview mirror and outside left mirror
Safety belts for all occupants
Seats for all occupants
Speedometer
Suspension components
Taillights
Tires (properly inflated; not damaged)
Turn signals (front and rear)
Windshield (**)
Windshield wipers and washers

* The driver and passenger doors must work from the inside and outside. Doors that cannot be opened are safety hazards.
** Examiners may refuse to administer a test if the vehicle's windshield is cracked so that it obstructs the driver's view.

Advanced safety features and driving technologies are becoming increasingly common in today's vehicles. Driving skills test applicants need to understand which of these advanced features may be used during the test and which are forbidden. **Passively active devices or systems** are those that engage as soon as the engine is running and don't require any additional action on the part of the driver. Examples may include the backup camera, blind-spot indicator lights or a lane-departure alarm. Passively active devices and systems are allowed during the driving skills test.

Driver-activated features include those that aren't operated by default but require an action by the driver to start the system. Examples may include a parking-assist system that automatically parks the vehicle, a four-way camera or an automated self-driving feature in which the vehicle steers itself. Driver-activated features and systems aren't allowed during the driving skills test. If there is any question about whether a system or device is permitted, check with the testing examiner before the test begins.

When used for testing purposes, driver education vehicles must not display any warning signs used for training. This includes "Student Driver" identification signs.

Other Automatic Failures

- Disregarding instructions or refusal to perform instructed maneuver.
- Repeated failure to follow instructions will result in test termination. If you intentionally fail to follow an examiner's instructions, the examiner will give you a verbal warning and ask you to repeat the exercise. If you fail to follow the same instructions twice, the test will be terminated as an automatic failure. If you don't understand the instructions the first time, the examiner will reread the instructions without penalty.
- Offering the examiner a bribe or gratuity.
- Refusal to wear a safety belt, unless you have a physician's statement or waiver.
- Any accident (may result in failure).
- Traffic violations or hazardous actions including, but not limited to:

Hazardous actions in which:

- Accident is prevented by others.
- Examiner prevents crash or illegal action (i.e., running a red light).
- Driving over curb or sidewalk, endangering others.
- Driver creates serious hazard for other traffic.
- Fails to yield (adversely affecting traffic/pedestrians).

Traffic violations in which the driver:

- Fails to yield right-of-way to a funeral procession.
- Passes a stopped school bus with its red lights flashing.
- Fails to take proper action when encountering a stationary or moving emergency vehicle; or a stationary road service vehicle.
- Turns left or right on red traffic light when prohibited by law.
- Makes a turn from the wrong lane.
- Passes improperly.
- Drives the wrong way on a one-way street.
- Drives on the wrong side of the street.
- Fails to stop for red light, flashing red light or stop sign.
- Fails to stop for railroad signal or drives around railroad gates.
- Speeds 4-9 mph over the basic speed limit (reasonable and prudent), or posted speed limit (white regulatory sign) after one warning.
- Speeds 10 mph or more over the basic speed limit (reasonable and prudent) or posted speed limit (white regulatory sign) with no warning necessary.
- Follows another vehicle too closely (after one warning).

Dangerously Inexperienced Drivers

You must obtain a passing score and finish the driving skills test without committing an automatic failure listed above. In addition, an examiner may terminate a test if you exhibit any behavior that demonstrates you may be dangerously inexperienced. For example, a test will be terminated if you:

- Can’t maintain the minimum posted speed limit on the expressway (unless traffic or weather warrants lower speeds).
- Drive more than 10 mph under the regulatory speed limit after one warning (unless traffic or weather conditions warrant lower speeds).
- When operating a manual transmission vehicle, you are unable to shift gears properly or operate the vehicle safely.

- When driving an automatic transmission vehicle, you are unable to determine the proper gear for operating the vehicle safely.
- Stall the vehicle resulting in hazardous action or obstructing traffic.
- Lose control of the vehicle causing the examiner to take evasive action or assume control of the vehicle.

Components of the Driving Skills Test

The driving skills test always includes a vehicle component familiarization and safety inspection (not scored) and two scored test segments. Each segment must be passed in sequence. **A failure of any part terminates testing.** On subsequent attempts, you must start over from the beginning (vehicle inspection, off-road skills test, then on-road driving test). You will be allowed only one attempt in a 24-hour period, unless the failure is due to faulty equipment or documents.

The test segments must always be given in the following order:

- Vehicle familiarization and safety inspection.
- Basic control skills test.
- On-road driving test.

Basic Control Skills Test Requirements

The basic vehicle control skills test consists of a series of off-road exercises. Scoring will be based on the following standards:

Encroachments: You are penalized each time your vehicle touches an exercise boundary. **Each encroachment counts as an error.**

Repositioning: You will be penalized each time you reposition your vehicle to correct your path of travel. For example, in a backing maneuver, a reposition point is assessed each time you adjust your vehicle forward. Likewise, in a forward maneuver, a reposition point is assessed each time you adjust your vehicle backwards. **Each reposition will count as an error.**

Final position: The examiner will assess how your vehicle finishes each exercise within the exercise boundaries.

At the end of the basic control skills exercises, the examiner will add your total cumulative points. To pass this segment and continue with the on-road driving test, you must complete the basic control skills test with **six errors or less.**

The three required exercises you must perform in the Basic Control Skills test are outlined below in figures 1-3.

Figure 1: Forward Stop Line

You will drive forward and stop your vehicle with your front bumper within 2 feet of the "stop line" without touching or going past the stop line. You can't lean out the window to see better. You will be scored on the final position of your vehicle relative to the stop line.

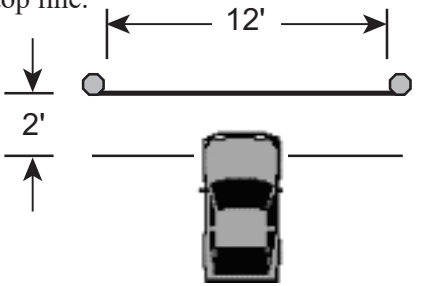

Figure 2: Curved path backing - sight side (Y-turn)

You will back your vehicle from a 90-degree angle into a simulated driveway. Try to back into the space without touching or crossing over either side boundary (excluding mirrors). Try to finish the exercise with the rear bumper (farthest most point) of your vehicle within 2 feet of the rear boundary, not on or over the solid line between the cones. The vehicle don't have to be evenly centered.

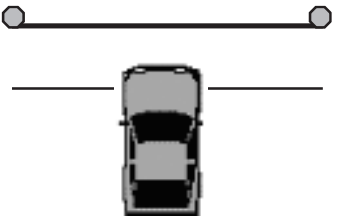

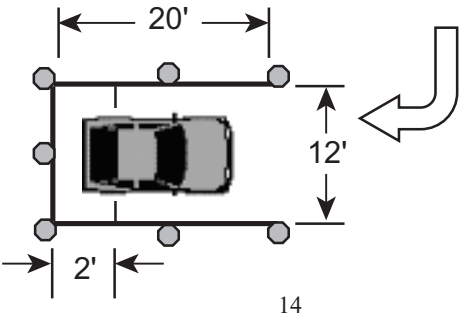

Figure 3: Curved path backing - blind side (parallel parking)

You will drive by the entrance of a parking space located on the passenger side of your vehicle. You will then back your vehicle into the space. The size of the space is determined by adding 6 feet to the length of your vehicle. You must try to finish the exercise with your vehicle positioned completely within the parking space. Your vehicle **doesn't** have to be evenly centered within the front and back boundary lines. When backing, try to perform the maneuver without touching or crossing over any boundary lines or repositioning your vehicle.

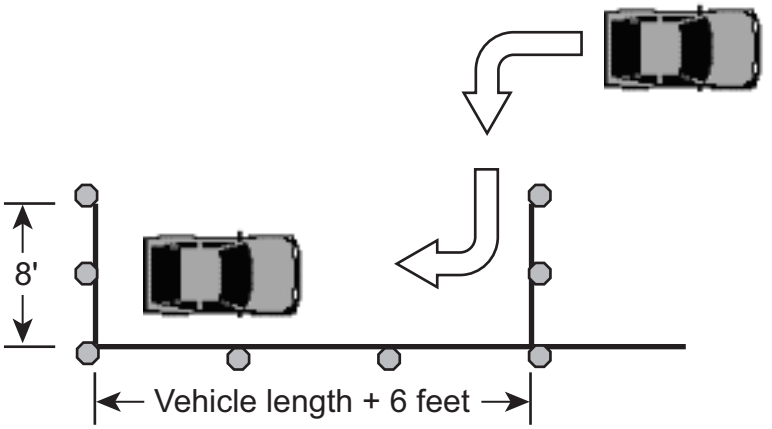

The On-the-Road Test

You must demonstrate your ability to drive safely over a predetermined route. The route will contain a variety of traffic situations including city, residential and expressway driving. At all times during the driving test, you must operate your vehicle in a safe and responsible manner, obeying all traffic laws.

The examiner will observe and score you on specific maneuvers as well as on your general driving behavior. You are expected to drive straight ahead unless given instructions to turn or perform other maneuvers. The examiner will give you directions for each maneuver as far in advance as possible and won't ask you to do anything illegal or unsafe.

Driving Skills Test Requirements

Although every driving test route may not be identical, each route will contain similar maneuvers that will "equalize" the difficulty of any route approved by the Michigan Department of State. Every route will attempt to contain each of the following maneuvers:

- Left turns with varying difficulty.
- Right turns with varying difficulty.
- Intersections that involve stopping and then driving straight through.
- Intersections that involve driving straight through without stopping.
- Expressway or rural highway driving (lane changes required).
- Urban and residential driving (lane changes required).
- Collision avoidance (simulated head-on collision).
- Curve.
- Railroad crossing (actual or simulated).
- Turning a fan (or radio) on and off while driving.

Driving Skills Test Scoring Standards

The proper way to perform each of the required driving test maneuvers are outlined in this section. To better prepare yourself for your test, please read this section carefully and practice these maneuvers until you have mastered them. The information provided in this section contains scoring tips and should not be considered comprehensive instructions on how to complete the maneuvers.

To obtain a passing score, you can't accumulate **more than 25 points** or receive an automatic failure.

Turns:

You have been asked to make a turn. Be sure to:

- Recognize the need to set up for the turn in advance; move to the appropriate lane in preparation for the upcoming turn.
- Enter the turn lane at a designated opening (if traffic permits). Don't enter too early or too late and don't straddle or cross over lane markings.
- Check traffic in all directions. Traffic checks must be made obvious to the examiner by moving your head.

- Check blind spots by looking over your shoulder before merging into the curb lane or center left turn lane.
- Use turn signals and safely move into the appropriate turn lane.
- Enter left or right turn lanes at their designated openings.
- Activate your turn signal approximately 100 feet ahead of a turn, but not so early as to mislead others about where you are turning.
- Brake smoothly without jerking the vehicle. Never depress the accelerator and brake pedal at the same time.

If you must stop before making the turn:

- Yield to traffic or pedestrians in an intersection. Don't stop unnecessarily for yield signs, flashing yellow lights, green traffic signals, etc.
- Come to a smooth, complete stop without skidding. Don't let your vehicle roll forward or backward while stopped.
- Come to a complete stop before the stop line, crosswalk, or sidewalk. If there is no stop line, crosswalk, or sidewalk, stop at a safe place before the intersection.
- If stopping behind another vehicle, stop at a safe distance where you can see, at a minimum, the rear tires on the vehicle directly ahead of you (safe gap). Always leave enough space to pull out and around the vehicle in front of you should it be necessary (escape route).
- On left turns, if appropriate and when safe to do so, pull ahead into the intersection to prepare for your turn. If present, keep the traffic signal visible and keep your front wheels aimed straight ahead until starting your turn.

When ready to turn:

- Check traffic in all directions, making your search obvious to the examiner by moving your head. Make sure you have enough time to make the turn safely without causing other vehicles to adjust their speed or take evasive action (proper timing).
- Yield to any vehicles or pedestrians in the intersection.
- Unless shifting, you should keep both hands on the steering wheel during the turn. Don't palm the wheel.
- When turning, don't allow your vehicle to touch or cross lane lines or hit curbs.
- Your turn should be completed smoothly, at a speed that isn't too fast or too slow.

Upon completing the turn:

- Check traffic in all directions, making your search obvious to the examiner by moving your head.
- Turn into the correct lane. When turning left from a single left turn lane, your vehicle should finish the turn in the lane that is directly to the right of the centerline. When turning right, your vehicle should finish the turn in the right-most (curb) lane.
- Maintain controlled steering to straighten your vehicle after turning.
- Accelerate to adjust your vehicle speed and keep pace with the flow of traffic.
- Signal and move to the right lane if you are traveling slower than other traffic, or if other vehicles are passing you on the right.

Stop intersections:

As you approach an intersection that requires stopping prior to proceeding straight through:

- Check traffic in all directions, making your search obvious to the examiner by moving your head.
- Brake smoothly and stop without skidding or jerking the vehicle. Come to a full and complete stop. Don't let your vehicle roll forward or backward while stopped.
- Come to a complete stop before the stop line, crosswalk, or sidewalk. If there is no stop line, crosswalk, or sidewalk, stop at a safe place before the intersection.
- If stopping behind another vehicle, stop at a safe distance where you can see, at a minimum, the rear tires on the vehicle directly ahead of you (safe gap). Always leave enough space to pull out and around the vehicle in front of you should it be necessary (escape route).

As you drive through the intersection:

- Check traffic thoroughly in all directions, making your search obvious to the examiner by moving your head. Make sure you have enough time to cross the intersection safely without causing other vehicles to adjust their speed or take evasive action.
- If the traffic light turns yellow as you approach, you should attempt to stop before entering the intersection. If you can't stop safely, don't speed up; drive cautiously through the intersection.
- Yield to any pedestrians or vehicles in the intersection.

- Don’t change lanes in the middle of an intersection.
- Both hands should be kept on the steering wheel (unless shifting).
- Adjust your vehicle speed to keep pace with traffic.

Through intersections (do not require stopping):

When approaching an intersection that doesn’t require stopping:

- Check traffic in all directions, making your search obvious to the examiner by moving your head.
- Yield to any vehicles and pedestrians in the intersection. Unless you are yielding to vehicles or pedestrians, don’t stop for green traffic lights. Unnecessary stopping can create a potentially dangerous situation.
- Take your foot off the accelerator as you scan the intersection for possible hazards. Placing your foot over the brake pedal while scanning helps you react quicker to potentially hazardous situations
- Don’t change lanes in an intersection.
- Unless shifting, you should keep both hands on the steering wheel.
- Adjust your vehicle speed to keep pace with traffic.

Expressway or rural highway:

Before entering an expressway:

- Check traffic to find an opening to merge into. Check blind spots by looking over your shoulder before merging onto the expressway.
- Activate your turn signal.
- Adjust your speed to allow you to merge into the flow of traffic.
- Merge smoothly into the nearest expressway lane, allowing proper spacing between you and the vehicles in front of and behind you.
- Stay within lane markings.
- Cancel your turn signal once you have merged completely into the lane.

When driving on an expressway or on a rural highway:

- Check traffic regularly (usually at least once every 8-10 seconds). Make your traffic check obvious to the examiner by moving your head. Maintain awareness of merging and exiting vehicles. Also, look at least 12 seconds ahead of the vehicle to anticipate hazards.

- Maintain a “cushion of space” around your vehicle. Don’t crowd other vehicles and avoid driving in a pack of vehicles.
- Select a safe and legal speed that allows you to keep up with the traffic flow without exceeding the speed limit or driving slower than the minimum posted speed, unless road and weather conditions determine otherwise.
- Drive in the right-most lane(s) unless you are passing another vehicle.
- Center your vehicle within the lane markings. Don’t weave over lane lines.

When changing lanes on an expressway or on a rural highway:

- Drive at a speed approaching the flow of traffic to ensure a safe lane change.
- Check traffic in all directions. Check blind spots by looking over your shoulder before changing lanes.
- Activate your turn signal to alert other drivers that you intend to change lanes.
- Yield to any vehicles occupying the lane you are merging into.
- Merge smoothly into the next lane; keep your vehicle under control and maintain speed.
- Allow proper spacing between you and the vehicles in front of and behind you.
- Cancel your turn signal after completely merging into the lane.

When exiting an expressway:

- Check traffic in all directions, especially to the right, including looking over your shoulder to check your blind spot.
- Activate your turn signal to alert other drivers that you intend to exit.
- Exit at a speed appropriate for traffic conditions. Under normal conditions, your vehicle’s speed shouldn’t drop below the posted minimum speed while on the expressway.
- Merge smoothly into the deceleration lane without driving over solid lane lines. Remain centered in your lane.
- Allow proper spacing between you and the vehicles around you.
- Once you are on the deceleration ramp, reduce your speed.
- Cancel your turn signal after you have merged completely into the deceleration lane.

Urban and residential areas:

When driving in an urban or residential area:

- Check regularly (at least once every 5-7 seconds) for pedestrians, bicycles and moving or parked vehicles, especially in areas where children may be present. Make your traffic checks obvious to the examiner by moving your head.
- Maintain a “cushion of space” around your vehicle. Don’t crowd other vehicles and avoid driving in a pack of vehicles.
- Select a safe, reasonable and prudent speed that allows you to keep up with the traffic flow without exceeding the speed limit.
- When traveling in a multi-lane urban area, you should remain in the right lane if you are traveling slower than other traffic.
- Keep your vehicle centered in your lane. Don’t weave outside of lane markings or into the lane of oncoming traffic.

When changing lanes in an urban area:

- Check traffic in all directions. Check blind spots by looking over your shoulder before changing lanes.
- Activate your turn signal to alert other drivers that you intend to change lanes.
- Yield to any vehicles occupying the lane you are merging into.
- Merge smoothly into the next lane; keep your vehicle under control and maintain speed.
- Allow proper spacing between you and the vehicles around you.
- Cancel your turn signal after merging completely into the lane.

Curves:

When approaching a curve:

- Check traffic thoroughly in all directions. Keep your head up and remain focused ahead of the curve.
- **Before** entering the curve, reduce speed so further braking or shifting is not required in the curve.
- Keep both hands on the steering wheel.
- Maintain a safe and legal speed driving **through** the curve.
- Keep the vehicle within lane markings.

Railroad crossings:

As you approach a railroad crossing:

- Check traffic in all directions making your search obvious to the examiner by moving your head.
- Look to the left and right by moving your head and listen for the presence of trains.
- Decelerate, brake smoothly and shift gears before you cross the railroad tracks. Shifting gears while crossing the railroad tracks isn't safe. Your speed over the tracks should be appropriate for the condition of the tracks and road surface.
- Keep both hands on the steering wheel while driving over the railroad tracks.
- Don't change lanes as you cross the railroad tracks.
- If required to stop for a train, remain stopped behind the stop line until it is safe and legal for you to proceed.

Turn fan (or radio) on/off:

When the examiner instructs you to turn on/off your fan (or radio):

- If you must take your eyes off the road to locate your fan (or radio) switch, do so briefly. Taking your eyes off the road for long periods of time may create a hazardous situation.
- Maintain your lane position and speed during this exercise.
- Removing your hand from the steering wheel to turn a fan (or radio) on or off shouldn't cause you to weave out of your traffic lane.

Crash avoidance (simulated head-on collision):

At a designated location, the examiner will ask you to verbalize what you would do if an oncoming vehicle were headed directly at you in your lane. During this exercise, you will be required to **verbalize, not demonstrate,** the following concepts. Try to maintain the speed of your vehicle while verbalizing this exercise.

- To avoid a head-on collision, drive off the road to the right.
- If the oncoming vehicle forces you to hit a fixed object on the side of the road, you should choose a soft object, not a hard object, if possible. You should also try to hit the object with a glancing blow (side-swipe).

General Driving Habits

During the test, you must:

- Wear your safety belt (all occupants in vehicle must wear safety belts).
- Obey all traffic signs, signals and laws.
- Complete all traffic checks by moving your head to make your search obvious to the examiner.
- Keep both hands on the steering wheel (unless shifting).
- Complete the test without an accident or moving violation.

Throughout the test, you will be scored on your overall performance in the following general driving behavior categories:

Search:

- Establish a pattern of searching left, right, ahead, and behind using all available mirrors and moving your head to make your traffic checks obvious to the examiner. Searching involves head and eye movements, as well as turning and looking over your shoulder to check blind spots.
- Anticipate traffic, pedestrians, people entering and exiting parked vehicles and potentially hazardous situations well in advance. Pay careful attention to merging vehicles and vehicles near driveways and intersections.
- Scan ahead to get the "big picture." Keep your eyes and head up to observe well ahead of the vehicle (about 12 seconds).
- Unless you are yielding to traffic or pedestrians in an intersection, don't stop for green traffic lights. Doing so can create a potentially dangerous situation.
- When driving, keep distracting behaviors to a minimum. Your attention should remain focused on driving tasks and not on distractions that may prevent you from spotting potential hazards.

Speed and brake control:

- Don't exceed the speed limit that is prescribed by a regulatory (white) sign, advisory (yellow) sign or by prevailing weather, roadway and traffic conditions.
- Don't drive too slowly or too fast for traffic conditions. Try to keep pace with the surrounding traffic without exceeding the speed limit. This is especially important when turning or driving through a curve.

- Accelerate evenly and smoothly without jerking the vehicle.
- When decelerating, brake smoothly and evenly, not too hard or too soft. Under normal circumstances, you shouldn't ride or pump the brakes.
- Always come to a complete stop. Don't roll through stops or allow the vehicle to drift forward or backward at stops.
- When driving a standard transmission vehicle, don't clash gears, rev or lug the engine. Also, know how to use the clutch properly to prevent choppy accelerating and decelerating.
- Make sure you are in a gear that is appropriate for the direction and speed you are traveling.
- Change gears smoothly and as needed, but don't coast to a stop with the gearshift lever in neutral. Once stopped, you may place the transmission in neutral.
- Check your speedometer occasionally to make sure you are traveling at a safe and legal speed but be careful not to look at your speedometer too frequently. Overly frequent checks of your speedometer may cause you to take your eyes off the road too often.

Direction and space control:

- Whenever you change lanes or turn, you must use your turn signal. Once you complete a lane change, you must also remember to cancel your signal if it doesn't automatically cancel.
- When turning, don't touch or cross over your lane markings or hit curbs.
- When driving straight ahead, try to keep your vehicle centered within your lane without weaving outside of the lane markings.
- Don't turn from or into the incorrect lane.
- When driving on an expressway, in a multi-lane urban area or on a rural highway, move to the right lane if you are traveling slower than other traffic, or if vehicles are passing you on the right.
- When necessary, come to a complete stop behind stop lines, crosswalks, sidewalks, or at a safe place before entering an intersection (behind a stop sign, if practical). If an object is obstructing your vision, you may, after stopping behind a stop line, crosswalk, etc., roll forward and stop again as long as you stop before entering the intersection.
- When stopped behind other vehicles, you must be able to see, at a minimum, the rear tires of the vehicle ahead of you (safe gap). Always leave enough space to pull out and around the vehicle in front of you should it be necessary (escape route).

- Maintain a reasonable space cushion between you and other vehicles. Don't crowd other vehicles or allow other vehicles to crowd you. Keeping a safe distance between your vehicle and other vehicles will give you more time to react to hazardous situations.
- When merging with other traffic, be sure you maintain proper spacing in front and in back of your vehicle.

Steering control:

- Don't palm the wheel or drive with only one hand on the wheel. Although you may have to remove a hand to adjust driver controls, don't do so while driving through an intersection, turning, or changing lanes.
- At all times during the skills tests, you must maintain proper control of your vehicle. Your ability to steer smoothly, recover easily from turns and control your vehicle within lane markings will be monitored carefully.
- When pausing to make a left turn, keep the front wheels of your vehicle pointed straight ahead until you begin your turn. If you stop with your wheels turned left, a rear end collision will likely send you into oncoming traffic.

Timing:

- When stopping, do not brake too early or too late. Late braking can result in vehicle skidding or passengers being thrust forward in their seat.
- Activate your turn signal at least 100 feet ahead of where you are turning (approximately 3-4 seconds), but not so early as to mislead others as to where you are turning.
- Don't drive too timidly or aggressively. Overly timid driving may indicate a lack of necessary experience and skill, and overly aggressive driving may stretch you beyond your ability to handle your vehicle safely.
- Make sure you have enough time to complete any maneuver safely without causing other vehicles to adjust their speed or take evasive action. Your timing and ability to adjust your speed to match traffic conditions is very important.
- Always yield to other traffic or pedestrians in your path of travel. When you see a potentially hazardous situation, take action in advance to avoid making the situation more hazardous.

Miscellaneous traffic violations:

Told to wear seat belt: Unless you have a physician's statement or waiver, a seat belt must be worn during the driving test. Refusal will result in an automatic failure.

Fails to respond to stationary emergency vehicle: You are required by law to exhibit due care and caution (lane change or reduce speed as traffic/roadway permits) when approaching a stationary emergency vehicle.

Other: When the vehicle is in motion, you must obey all traffic laws.

Completion of the Driving Skills Test

Once you have completed your Driving Skills Test, the examiner will review your results and give you feedback on your driving performance. If you don't successfully complete your test, you may reschedule a subsequent test after 24 hours. Tests terminated due to driver performance **cannot** be rescheduled for the same day.

If you successfully complete your Driving Skills Test, the examiner will issue a Driving Skills Test Receipt. The examiner is required to sign it before presenting it to you.

The Driving Skills Test Receipt is **not a license**. To obtain your Temporary Operator's Permit (TOP), you will either visit a Secretary of State branch office or print your TOP by logging onto your online services account on Michigan.gov/SOS. Check your receipt for further instructions.

Michigan Supervised Driving Log

Parents or guardians are responsible for making certain that their teen has complete at least 50 hours of supervised driving, with 10 of those hours completed at night. The 50 hours may be completed with a licensed parent or legal guardian, any licensed driver 21 years of age or older designated by the parent or legal guardian, or a teen-certified driver education provider. The goal is for your teen to be as prepared as possible for their Level 2 Intermediate License.

A supervised driving log must be presented to your teen's Segment 2 Driver Education instructor to show that at least 30 hours (including 2 hours of nighttime driving) were completed before beginning the course.

The log will need to be shown again to a Driving Skills Test Examiner showing that at least 50 hours (including 10 hours of nighttime driving) were completed before the teen is allowed to take the Driving Skills Test.

The log that follows and the free mobile app, RoadReady®, are the preferred formats. Other driving log formats will be accepted. If using the mobile app, RoadReady®, the information may be printed from the app or shown on the mobile device.

Name of New Driver: _____

Skills

1. Before you start the engine
2. Moving, steering and stopping
3. How close are you?
4. Backing up
5. Driving on a quiet street
6. Looking ahead
7. Turning around
8. Parking
9. Multi-lane roads
10. City driving
11. Freeway driving
12. Roundabouts

Daytime Driving

Date	Skill No.	Amount of Time	Weather Conditions	Supervisor's Initials	Comments

Daytime Driving Continued

Date	Skill No.	Amount of Time	Weather Conditions	Supervisor's Initials	Comments

If more space is needed, additional pages may be attached.

Total Daytime Hours (40 minimum): _____

Rev. 07/2017